Department of Electronics and Communication Engineering
Amrita School of Engineering, Coimbatore - 641112

Batch ID: 23ECE381C10

B.Tech – ECE
23ECE381 Open Laboratory – I

Exhibition Date:11/10/ 25

DIGITAL LOCKING SYSTEM WITH UNAUTHORIZED ACCESS ALERT

CB.EN.U4ECE23212 – Chittesh S
CB.EN.U4ECE23246 – Sricharan R P
CB.EN.U4ECE23249 – Sujith Krishna P G

PROBLEM STATEMENT

In everyday life, people rely on locks to secure homes, offices, and personal belongings. Traditional mechanical locks face issues such as key loss, duplication, and wear-and-tear, making them less reliable. Commercial digital locks often depend on microcontrollers, which increase cost and complexity.

The challenge is to design and implement a digital locking system that is secure, customizable, and low-cost, built entirely with discrete digital logic ICs.

The system must achieve the following:

1. **Password Entry & Storage**
2. **Verification & Authentication**
3. **Access Control**
4. **Security Alert**
5. **Reset Option**

The main challenge is integrating input handling, storage, authentication, and output control solely through gate-level logic, ensuring a solution that is robust, affordable, and practical for real-world security needs.

APPROACH / DESIGN/ METHODOLOGY

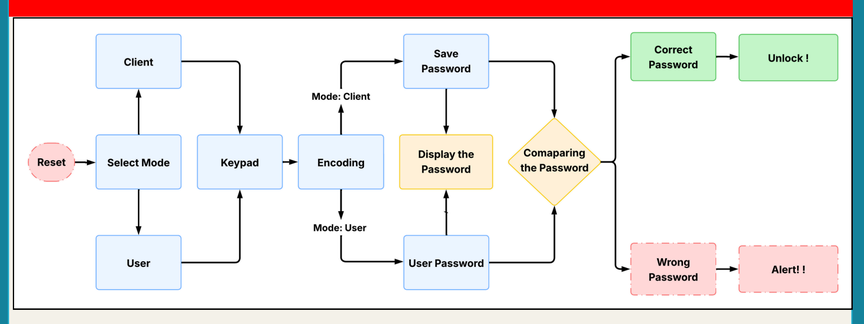

Fig.1 Block Diagram

The design of the digital locking system follows a modular hardware-based approach, where each stage of the system is carefully structured to handle input processing, password storage, authentication, and output feedback.

1. Input Stage (Keypad & Encoder)
- Password entered via numeric keypad.
- IC 74147 encodes key press into 4-bit binary.

2. Password Storage & Control
- Shift Registers (74194): Store saved password and user input.
- D Flip-Flop (4013): Tracks number of digits entered.
- Demultiplexer (4555): Switches between set mode and verification mode.

3. Authentication Logic
- 2-input XNOR (4077): Compare input with stored password.
- 4-input AND: Send HIGH and LOW signal.
- Decoder (4555): Activates either of outputs Q0,Q1 for authentication.

4. Output & Feedback
- Correct Password: Green LED + Motor runs
- Incorrect Password: Red LED + Buzzer alert.
- Reset Button: Clears input for retry.

CIRCUIT DIAGRAM /ALGORITHM

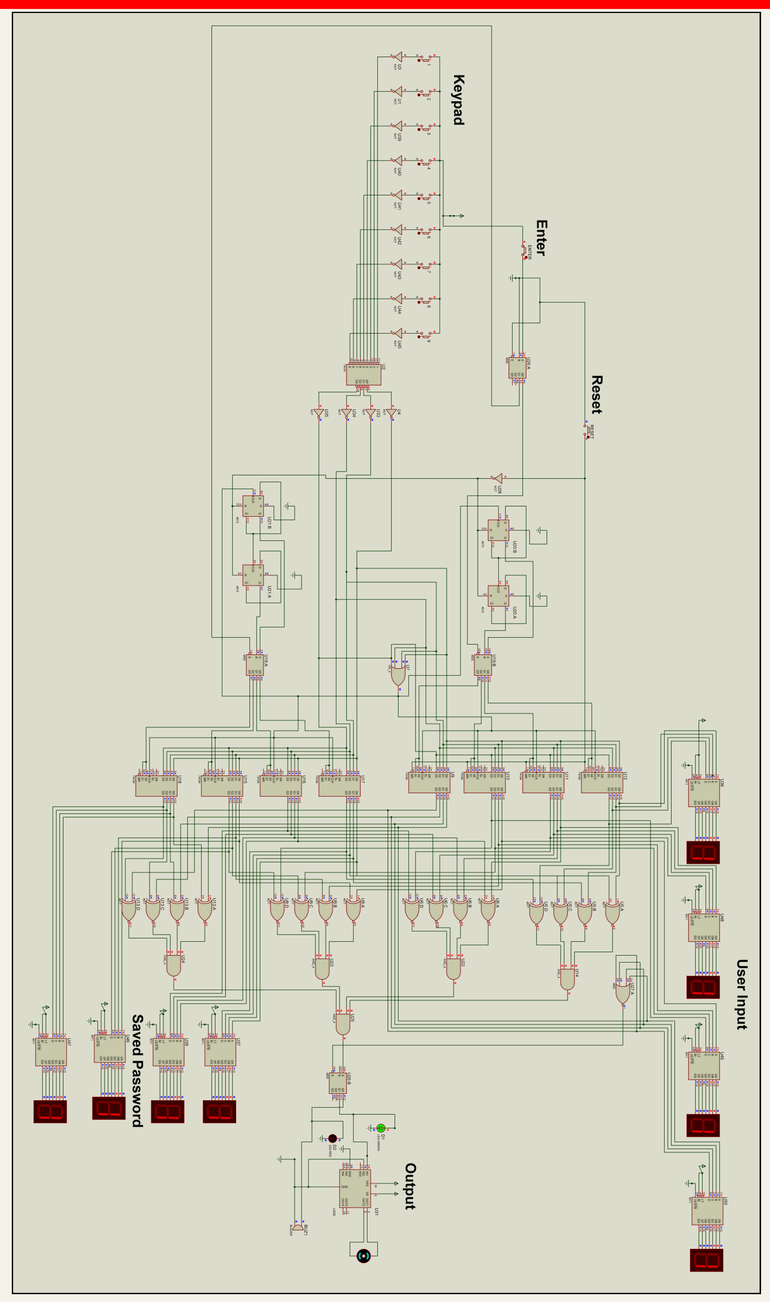

Fig.2 Digital Locking System Circuit

SIMULATION RESULTS

User:

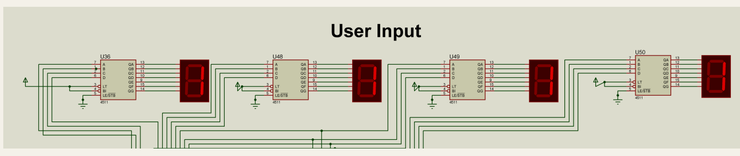

Correct Password: **Password:**

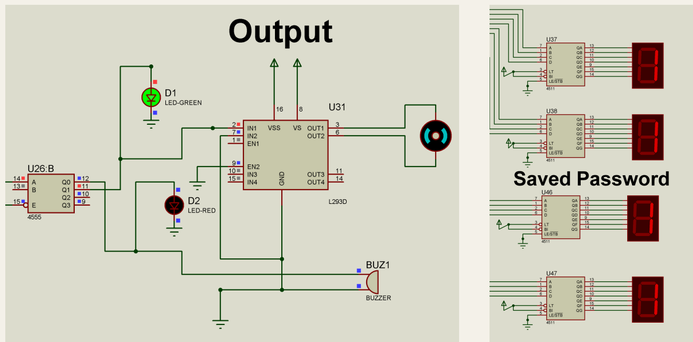

Fig.3 Green LED and motor runs for password match

User:

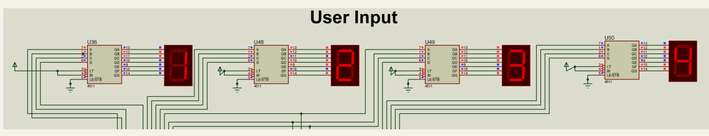

Incorrect Password: **Password:**

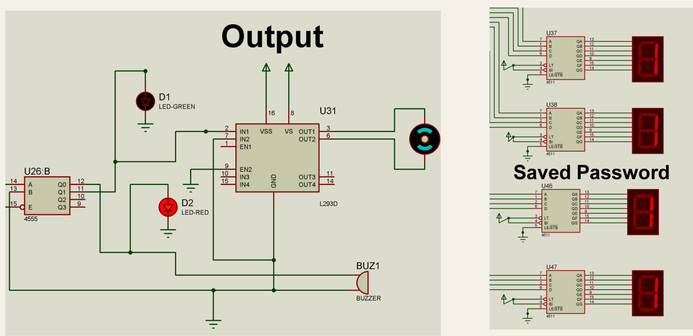

Fig.4 Red LED and Buzzer alert for password mismatch

RESULTS

Mode Selection:
- Enter Button (Hold) → User Mode (to enter code)
- Enter Button (Release) → Client Mode (to save code)

Password Entry and Storage:
- Keypad Press(eg.,'8') → Encoder → 4-bit Binary Output(1000).
- Binary Output → Stored in Shift Registers (driven by Asynchronous Counter).
- Reset Button → Clears all data in shift registers.

Verification/Comparison:
- For each digit in shift registers, 4 XNOR gates compare user password and saved password.
- The 4 XNOR outputs feed a 4-input AND gate.
- AND gate HIGH = The digit matches.

Authentication:
- The 4 "digit match" signals feed a final 4-input AND gate.
- Final AND gate HIGH = The entire password matches.
- This final signal goes to a Decoder:
- For Correct Password:
  - Match (HIGH): Decoder gets input 01 → Q1 activates → Green LED + Motor.
- For Incorrect Password:
  - Mismatch (LOW): Decoder gets input 00 → Q0 activates → Red LED + Buzzer.

REFERENCES

[1] Electronics Project vol.15, PROGRAMMABLE NUMBER LOCK, S. Hari Kumar

[2] GSMBasedDigital Door Lock Security System. 2015 IEEE International Conference on Power, Instrumentation, Control and Computing (PICC)

[3] A practical Digital Door Lock For Smart Home. 2018 IEEE International Conference on Consumer Electronics (ICCE)

[4] The Design and Construction of a 2-Digit Electronic Lock System Using Simple Circuit Elements and Digital Electronic Logic Gates. Research, Gate Published on March15,2017.

[5] https://www.allaboutcircuits.com/textbook/experiments/chpt-7/simple-combination-lock/

[6] https://www.instructables.com/Electronic-Code-Lock-System-Using-IC/

[7] https://www.gadgetronicx.com/digital-code-lock-circuit-without-microcontroller/